Cambridge Assessment International Education

Cambridge International AS & A Level

PHYSICS **9702/11**

Paper 1 Multiple Choice **October/November 2023**

1 hour 15 minutes

You must answer on the multiple choice answer sheet.

You will need: Multiple choice answer sheet
Soft clean eraser
Soft pencil (type B or HB is recommended)

INSTRUCTIONS

- There are **forty** questions on this paper. Answer **all** questions.
- For each question there are four possible answers **A**, **B**, **C** and **D**. Choose the **one** you consider correct and record your choice in soft pencil on the multiple choice answer sheet.
- Follow the instructions on the multiple choice answer sheet.
- Write in soft pencil.
- Write your name, centre number and candidate number on the multiple choice answer sheet in the spaces provided unless this has been done for you.
- Do **not** use correction fluid.
- Do **not** write on any bar codes.
- You may use a calculator.

INFORMATION

- The total mark for this paper is 40.
- Each correct answer will score one mark.
- Any rough working should be done on this question paper.

This document has **20** pages. Any blank pages are indicated.

© UCLES 2023

Data

acceleration of free fall	$g = 9.81\,\text{m s}^{-2}$
speed of light in free space	$c = 3.00 \times 10^{8}\,\text{m s}^{-1}$
elementary charge	$e = 1.60 \times 10^{-19}\,\text{C}$
unified atomic mass unit	$1\,\text{u} = 1.66 \times 10^{-27}\,\text{kg}$
rest mass of proton	$m_\text{p} = 1.67 \times 10^{-27}\,\text{kg}$
rest mass of electron	$m_\text{e} = 9.11 \times 10^{-31}\,\text{kg}$
Avogadro constant	$N_\text{A} = 6.02 \times 10^{23}\,\text{mol}^{-1}$
molar gas constant	$R = 8.31\,\text{J K}^{-1}\,\text{mol}^{-1}$
Boltzmann constant	$k = 1.38 \times 10^{-23}\,\text{J K}^{-1}$
gravitational constant	$G = 6.67 \times 10^{-11}\,\text{N m}^2\,\text{kg}^{-2}$
permittivity of free space	$\varepsilon_0 = 8.85 \times 10^{-12}\,\text{F m}^{-1}$ $\left(\frac{1}{4\pi\varepsilon_0} = 8.99 \times 10^{9}\,\text{m F}^{-1}\right)$
Planck constant	$h = 6.63 \times 10^{-34}\,\text{J s}$
Stefan–Boltzmann constant	$\sigma = 5.67 \times 10^{-8}\,\text{W m}^{-2}\,\text{K}^{-4}$

Formulae

uniformly accelerated motion	$s = ut + \frac{1}{2}at^2$ $v^2 = u^2 + 2as$
hydrostatic pressure	$\Delta p = \rho g \Delta h$
upthrust	$F = \rho g V$
Doppler effect for sound waves	$f_\text{o} = \frac{f_\text{s} v}{v \pm v_\text{s}}$
electric current	$I = Anvq$
resistors in series	$R = R_1 + R_2 + \ldots$
resistors in parallel	$\frac{1}{R} = \frac{1}{R_1} + \frac{1}{R_2} + \ldots$

© UCLES 2023

1 What is a reasonable estimate of the cross-sectional area of the wire in a paper clip?

A $1 \times 10^{-3}\,m^2$ **B** $8 \times 10^{-5}\,m^2$ **C** $8 \times 10^{-7}\,m^2$ **D** $1 \times 10^{-9}\,m^2$

2 Which quantity is **not** an SI base quantity?

A charge

B mass

C temperature

D time

3 A student determines the acceleration of free fall by using a small metal ball, as shown.

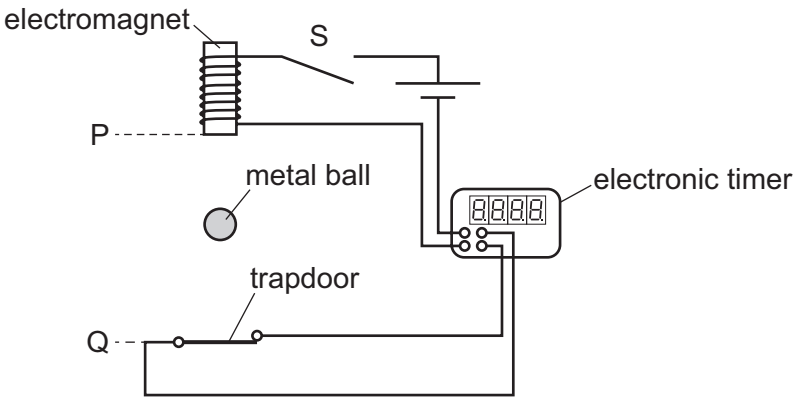

When switch S is opened, the ball is released from an electromagnet and an electronic timer is started. The ball then falls vertically downwards. The timer stops when the ball hits a trapdoor. The student measures the distance PQ between the electromagnet and the trapdoor. This distance and the reading on the timer are then used to calculate the acceleration of free fall.

Which statement about errors in the experiment is correct?

A The random error can be reduced by adding the diameter of the ball to the distance PQ.

B The random error can be reduced by subtracting the diameter of the ball from the distance PQ.

C The systematic error can be reduced by adding the diameter of the ball to the distance PQ.

D The systematic error can be reduced by subtracting the diameter of the ball from the distance PQ.

© UCLES 2023

4 The diagram shows two coplanar forces, P and Q, drawn to scale.



Force R is given by $R = Q - P$.

Which diagram represents R?

A

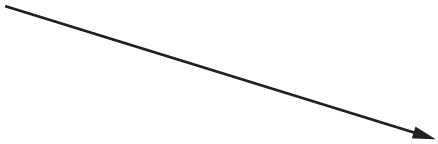

B

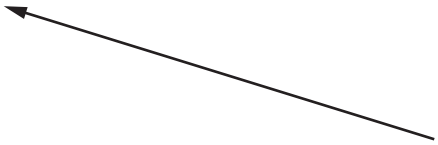

C



D



5 A parachutist falls from a stationary balloon at time $t = 0$. The velocity–time graph for the parachutist from time $t = 0$ until the time when he is just above the ground is shown.

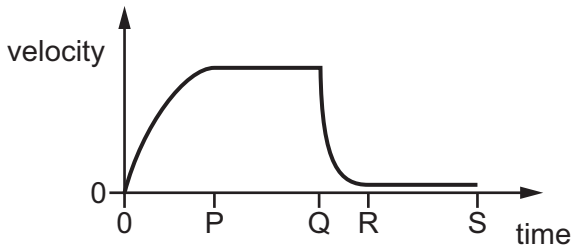

Which graph best shows the variation with time of the acceleration of the parachutist?

A

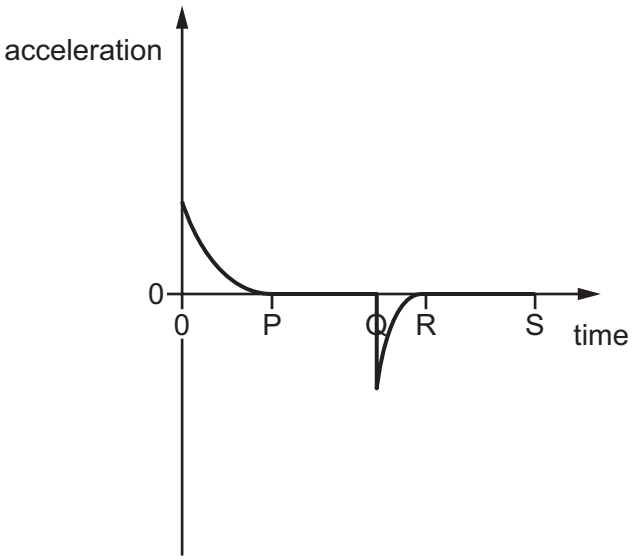

B

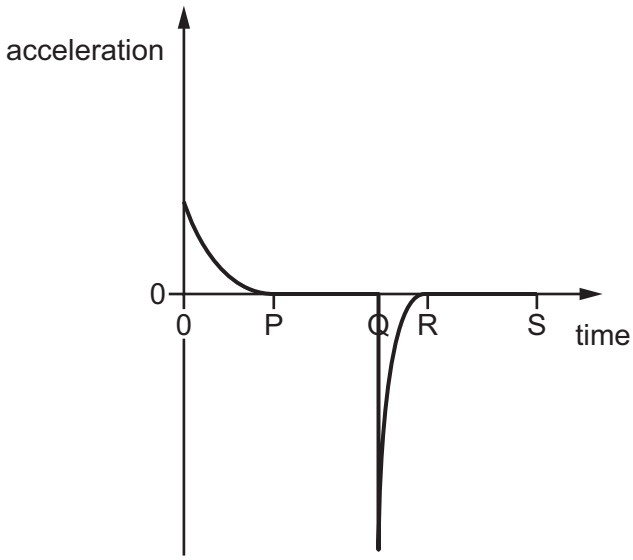

C

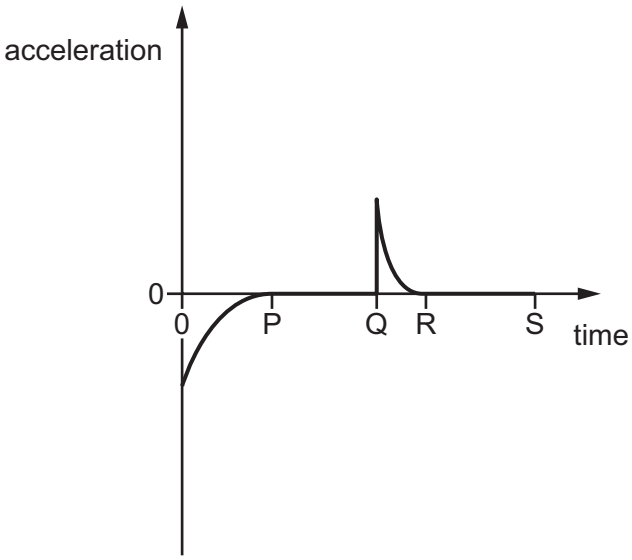

D

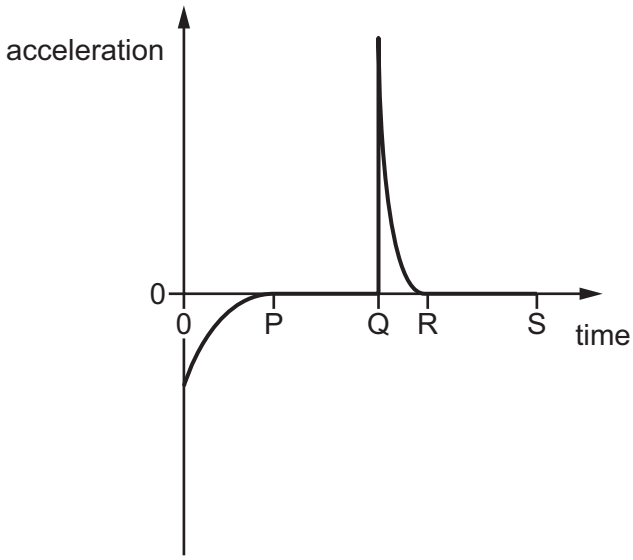

6 A projectile is fired from point P with velocity V at an angle θ to the horizontal. It lands at point Q, a horizontal distance R from P, after time T.

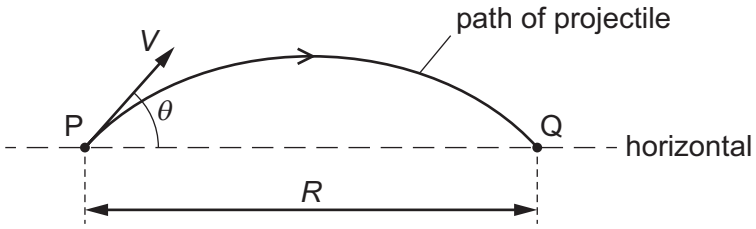

The acceleration of free fall is g. Air resistance is negligible.

Which equation is correct?

A $R = VT\cos\theta$

B $R = VT\sin\theta$

C $R = VT\cos\theta - \frac{1}{2}gT^2$

D $R = VT\sin\theta - \frac{1}{2}gT^2$

7 A man stands in a lift that is accelerating vertically downwards, as shown.

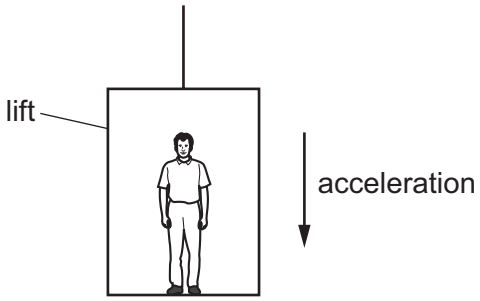

Which statement describes the force exerted by the man on the floor?

A It is equal to the weight of the man.

B It is greater than the force exerted by the floor on the man.

C It is less than the force exerted by the floor on the man.

D It is less than the weight of the man.

8 A ball of mass 200 g is thrown horizontally with a speed of $20\,m\,s^{-1}$ against a vertical wall.

The ball is in contact with the wall for a time of 0.10 s before rebounding back along its original path with a speed of $10\,m\,s^{-1}$.

What is the average force exerted by the wall on the ball during the collision?

A 20 N **B** 60 N **C** 20 kN **D** 60 kN

© UCLES 2023

9 In an experiment, a metal ball is dropped into a viscous liquid. The terminal velocity of the ball in the liquid is measured.

The experiment is repeated four times. For each repeat, a change is made to one of the following.

1 the density of the metal of the ball

2 the height from which the ball is dropped

3 the density of the liquid

4 the depth of the liquid

Which two changes separately affect the terminal velocity of the ball in the liquid?

A 1 and 2 **B** 1 and 3 **C** 2 and 4 **D** 3 and 4

10 Two objects move towards each other along the same straight line.

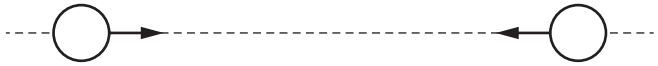

After colliding, the two objects stick together and are stationary.

Which statement **must** be correct?

A The total kinetic energy of the two objects does not change during the collision.

B The total momentum of the two objects before the collision is zero.

C The two objects have equal mass.

D The two objects have the same speed before the collision.

11 A minimum torque of 20 N m must be applied to the lid of a jar for it to open. The radius of the lid is 4.0 cm.

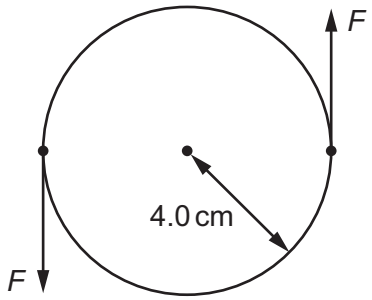

What is the minimum force *F* that must act on each side of the lid in order to open it?

A 2.5 N **B** 5.0 N **C** 250 N **D** 500 N

12 A uniform bar of length L and weight W rests horizontally on two supports X and Y.

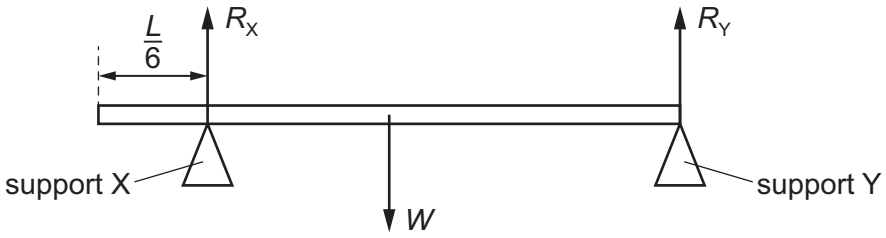

Support X exerts a vertical force R_X at a distance of $\frac{L}{6}$ from one end of the bar.

Support Y exerts a vertical force R_Y at the other end of the bar.

The bar is in equilibrium.

What is the ratio $\frac{R_X}{R_Y}$?

A $\frac{3}{2}$ **B** $\frac{2}{3}$ **C** $\frac{3}{5}$ **D** $\frac{2}{5}$

13 A type of firework is made by connecting two rockets, facing in opposite directions, to a rod, as shown.

The rod is attached to a frictionless pivot so that the firework can rotate in a vertical plane.

The firework has weight W. The pivot exerts a force R on the rod that is equal and opposite to W.

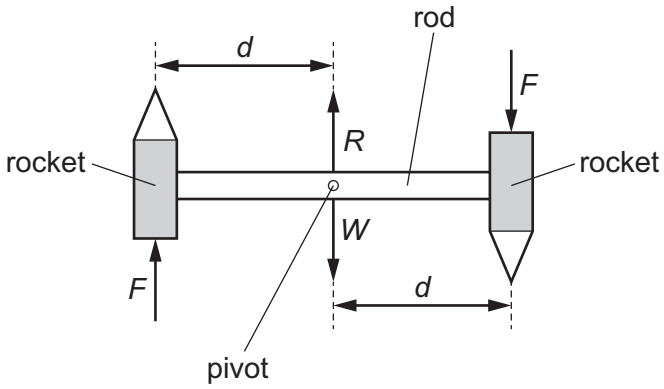

Each rocket exerts a force of magnitude F on the rod at a perpendicular distance d from the pivot. The forces exerted by the rockets are always in opposite directions.

Air resistance is negligible.

Which statement is correct?

A The firework is in equilibrium because the resultant force acting on it is zero.

B The firework is in equilibrium because the resultant torque acting on it is zero.

C The firework is not in equilibrium because the resultant force acting on it is not zero.

D The firework is not in equilibrium because the resultant torque acting on it is not zero.

© UCLES 2023

14 An object of weight W is suspended from a newton meter. When the object is completely immersed in water, the newton meter reads P. When the object is completely immersed in oil, the newton meter reads Q.

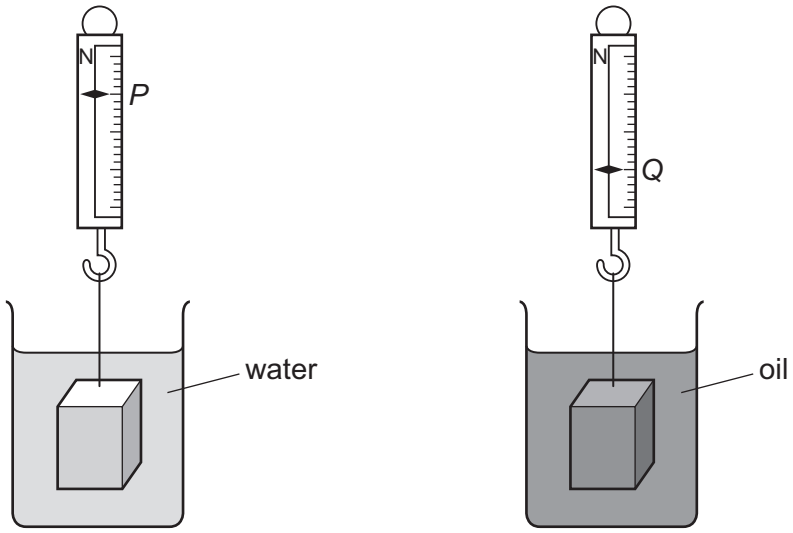

What is the ratio $\frac{\text{density of oil}}{\text{density of water}}$?

A $\frac{W-P}{Q-P}$ **B** $\frac{Q-P}{W-P}$ **C** $\frac{W-P}{W-Q}$ **D** $\frac{W-Q}{W-P}$

15 A crate of mass 50 kg is pushed a distance of 6.0 m along a horizontal surface against a constant resistive force of 70 N. The crate moves at a constant speed. It is then lifted, at a constant speed, through a vertical distance of 1.2 m onto the back of a lorry.

What is the total work done in this process?

A 420 J **B** 480 J **C** 590 J **D** 1000 J

16 The input power to a television is P_{in}. The useful sound and light power emitted by the television is P_{out}.

What is the efficiency of the television?

A $\frac{P_{out}}{P_{in}}$ **B** $\frac{P_{in}-P_{out}}{P_{in}}$ **C** $\frac{P_{in}}{P_{out}}$ **D** $\frac{P_{out}}{P_{in}-P_{out}}$

17 A builder holding a brick of mass 3000 g drops the brick on his foot.

What is a reasonable estimate of the change in gravitational potential energy of the brick?

A 30 J **B** 300 J **C** 3000 J **D** 30 000 J

© UCLES 2023

18 An elastic cord of unstretched total length 16.0 cm and cross-sectional area $2.0 \times 10^{-6}\,m^2$ is held horizontally by two smooth pins a distance 8.0 cm apart.

The cord obeys Hooke's law. A load of mass 0.40 kg is suspended centrally on the cord. The angle between the two sides of the cord supporting the load is 60°.

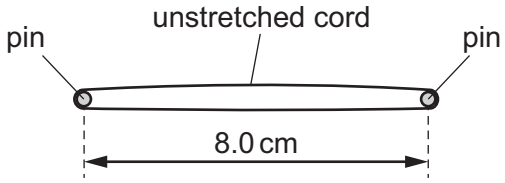

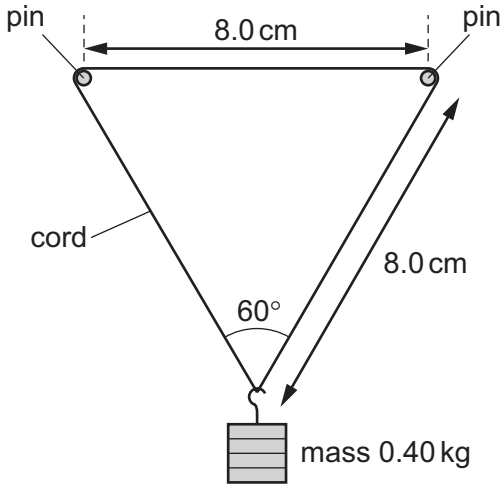

What is the Young modulus of the cord material?

A $5.7 \times 10^5\,Pa$ **B** $1.1 \times 10^6\,Pa$ **C** $2.3 \times 10^6\,Pa$ **D** $3.9 \times 10^6\,Pa$

19 Which force–extension graph shows plastic deformation of a sample of material?

A

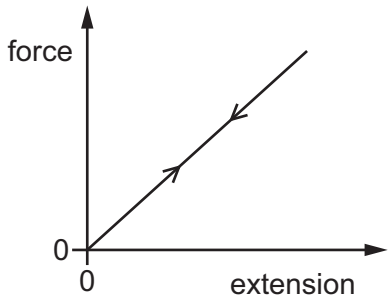

B

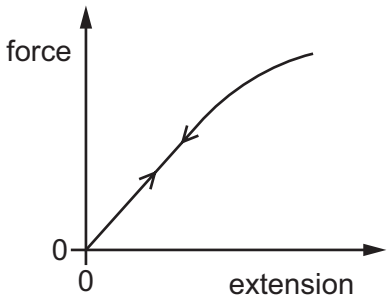

C

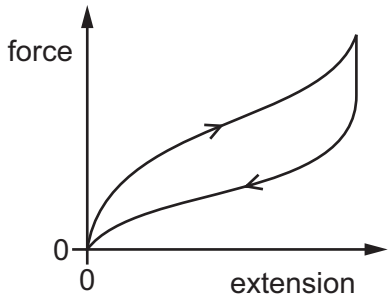

D

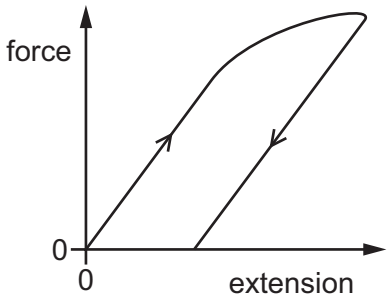

20 Two waves pass through a point P. The graph shows the variation with time t of the displacement s of the two waves at point P.

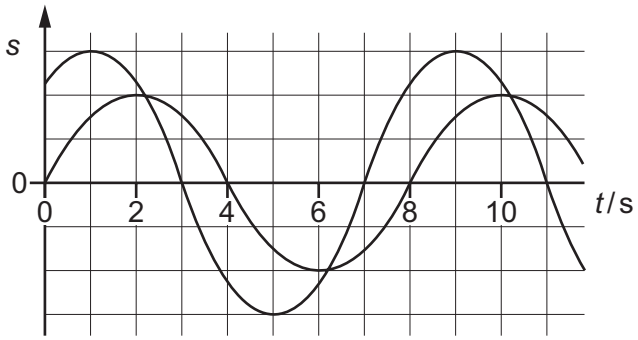

What is the phase difference between the two waves at point P?

A 0° **B** 45° **C** 90° **D** 180°

21 Which row is correct for both progressive transverse waves and progressive longitudinal waves?

	transverse waves	longitudinal waves
A	contain compressions and rarefactions	some can travel in a vacuum
B	can be polarised	contain compressions and rarefactions
C	vibrations are perpendicular to the direction of travel of the wave energy	can be polarised
D	some can travel in a vacuum	vibrations are perpendicular to the direction of travel of the wave energy

© UCLES 2023

22 A toy drone emits a sound of constant frequency 800 Hz. The speed of the sound in the air is $330\,m\,s^{-1}$.

The drone moves along a straight path directly towards an observer and then continues in a straight line directly away from the observer. The speed of the drone is constant.

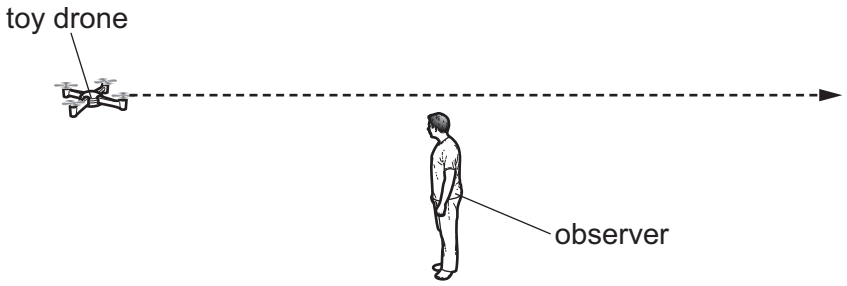

What is the velocity of the drone when the frequency of the sound heard by the observer is 850 Hz?

	magnitude of velocity / $m\,s^{-1}$	direction of velocity
A	19	away from the observer
B	21	away from the observer
C	19	towards the observer
D	21	towards the observer

23 Which statement about electromagnetic waves in a vacuum is correct?

A Infrared waves have shorter wavelengths than visible light waves.

B Microwaves have longer wavelengths than radio waves.

C Ultraviolet waves have higher frequencies than visible light waves.

D γ-rays have lower frequencies than X-rays.

© UCLES 2023

24 Vertically polarised microwaves are emitted from a source. The microwaves are detected by a receiver that is connected to a cathode-ray oscilloscope (CRO). The waveform displayed on the screen of the CRO has an amplitude of 2.6 cm.

A metal wire grid that acts as a polarising filter is now placed between the source and the receiver. The filter is orientated so that the plane of polarisation of the transmitted wave is at an angle of 20° to the vertical.

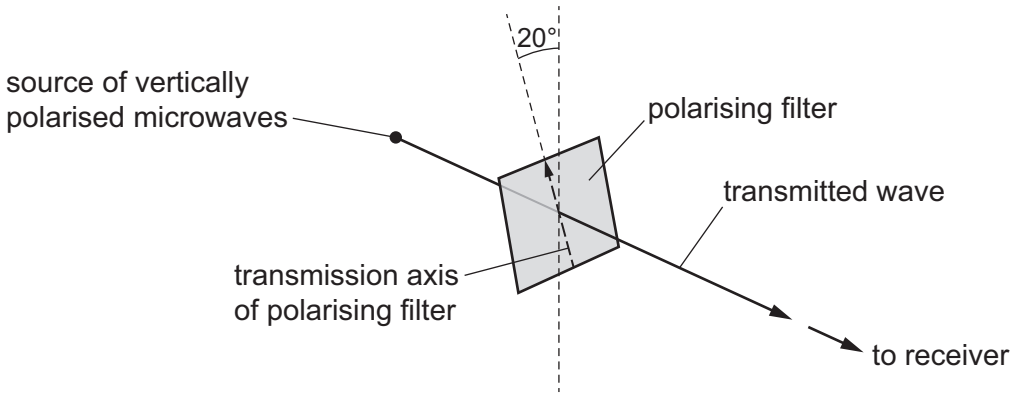

The distance between the source and receiver is unchanged. The settings on the CRO are also unchanged.

What is now the amplitude of the waveform displayed on the screen of the CRO?

A 0.30 cm **B** 0.89 cm **C** 2.3 cm **D** 2.4 cm

25 In an experiment, a stationary wave is formed on a string stretched horizontally between two fixed points.

Which statement about the experiment is correct?

A At certain times, the string between two nodes is horizontal with all points having zero displacement.

B Each point on the string between two antinodes has an oscillation of the same amplitude.

C The number of nodes is equal to the number of antinodes.

D Two adjacent antinodes oscillate in phase.

26 A musical organ produces notes by blowing air into a set of pipes that are open at one end and closed at the other.

The speed of sound in the air in the pipes is 320 $m\,s^{-1}$.

What is the lowest frequency of sound produced by a pipe of length 10 m?

A 4 Hz **B** 8 Hz **C** 16 Hz **D** 32 Hz

© UCLES 2023

27 In an experiment, water waves in a ripple tank are incident on a gap, as shown.

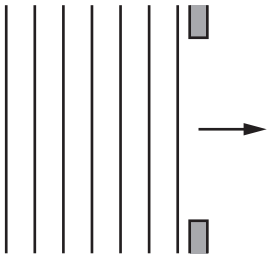

Some diffraction of the water waves is observed.

Which change to the experiment would provide a better demonstration of diffraction?

A Increase the amplitude of the waves.

B Increase the frequency of the waves.

C Increase the wavelength of the waves.

D Increase the width of the gap.

28 Light of wavelength λ is emitted from two point sources R and S and falls onto a distant screen.



At point P on the screen, the light intensity is zero.

What could explain the zero intensity at P?

A Light from the two sources is emitted 180° out of phase and the path difference to P is $\frac{1}{2}\lambda$.

B Light from the two sources is emitted in phase and the path difference to P is λ.

C Light from the two sources is emitted 90° out of phase and the path difference to P is λ.

D Light from the two sources is emitted in phase and the path difference to P is $\frac{1}{2}\lambda$.

29 A beam of red light of wavelength 720 nm is incident normally on a diffraction grating and produces a diffraction pattern on a screen placed parallel to the grating.

The beam of red light is replaced with a beam of electromagnetic radiation of wavelength *X*, which is incident normally on the same diffraction grating.

The third-order maximum for the electromagnetic radiation of wavelength *X* is at the same position on the screen as the second-order maximum for the red light.

What is wavelength *X*?

A 480 nm **B** 540 nm **C** 960 nm **D** 1100 nm

© UCLES 2023

30 The current I in a conductor is given by the equation shown.

$$I = Anvq$$

What does the letter n represent in this equation?

A charge carried per charge carrier

B number of charge carriers per unit area

C number of charge carriers per unit volume

D total mass of charge carriers per unit volume

31 In the circuit shown, the battery has an electromotive force (e.m.f.) of 6.0 V and negligible internal resistance.

The three resistors each have resistance R.

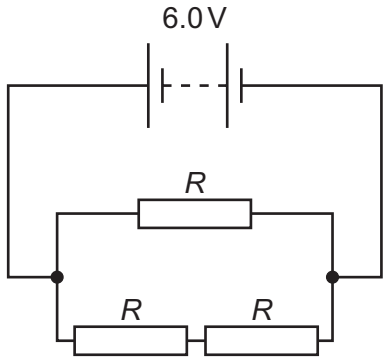

The total power dissipated in the resistor network is 24 W.

What is the value of R?

A 0.50 Ω **B** 1.0 Ω **C** 1.5 Ω **D** 2.3 Ω

32 Which graph could show how the resistance R of a filament lamp varies with the applied potential difference (p.d.) V, as V is increased to the normal operating p.d.?

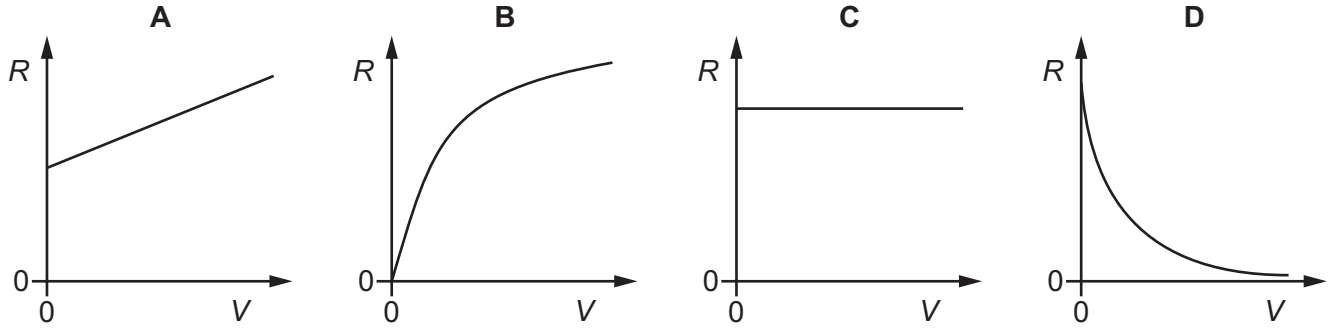

33 A piece of conducting putty is in the shape of a cylinder of length 60 mm and diameter 20 mm. The resistance between the ends of the cylinder is 20 Ω.

What is the resistivity of the putty?

A 0.033 Ω m **B** 0.10 Ω m **C** 0.42 Ω m **D** 5.2 Ω m

34 Which statement about the electromotive force (e.m.f.) of a cell is **always** correct?

A The e.m.f. is the energy converted from electrical to other forms in the cell.

B The e.m.f. is the energy provided by the cell per unit charge passing through it.

C The e.m.f. is the potential difference across the internal resistance of the cell.

D The e.m.f. is the potential difference across the terminals of the cell.

35 Kirchhoff's first and second laws are a consequence of the conservation of which quantities?

A charge and energy

B charge and resistance

C mass and energy

D mass and resistance

36 A circuit contains a cell of electromotive force E and internal resistance r connected to a resistor of resistance R. The current in the circuit is I.

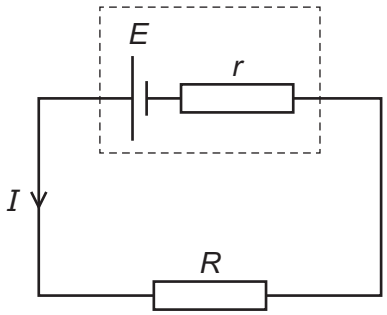

Which equation is correct?

A $E - Ir = IR$ **B** $E = Ir - IR$ **C** $E + Ir = IR$ **D** $E = IR$

37 A potential divider consists of two resistors of resistances R_1 and R_2 connected in series across a source of potential difference (p.d.) V_{in}. The p.d. across R_1 is V_{out}.

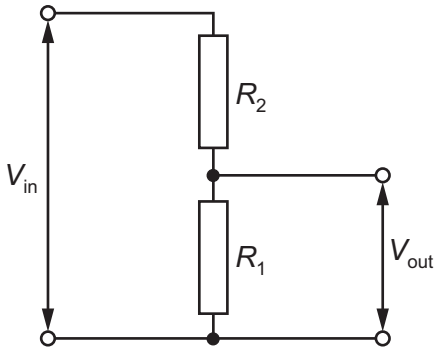

Which changes to R_1 and R_2 will increase the value of V_{out}?

	R_1	R_2
A	doubled	doubled
B	doubled	halved
C	halved	doubled
D	halved	halved

38 Two alpha-particles with the same kinetic energy are moving towards, and are then deflected by, a gold nucleus.

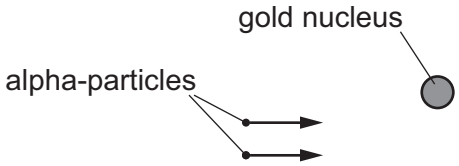

Which diagram could show the paths of the two alpha-particles?

A

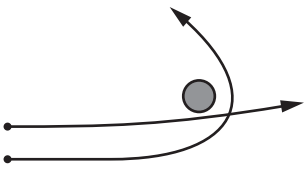

B

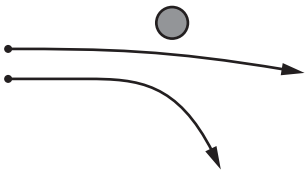

C

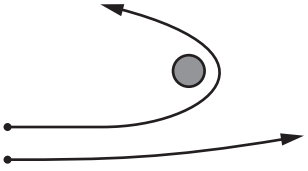

D

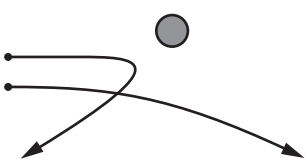

39 Which nuclide is formed when $^{10}_{6}C$ undergoes β^+ decay?

A $^{11}_{6}C$ **B** $^{9}_{6}C$ **C** $^{10}_{5}B$ **D** $^{10}_{7}N$

40 A particular hadron is composed of three quarks and has zero charge.

What is a possible quark composition of the hadron?

A down, down, strange

B up, down, strange

C up, up, down

D up, up, strange

© UCLES 2023

BLANK PAGE

BLANK PAGE

Permission to reproduce items where third-party owned material protected by copyright is included has been sought and cleared where possible. Every reasonable effort has been made by the publisher (UCLES) to trace copyright holders, but if any items requiring clearance have unwittingly been included, the publisher will be pleased to make amends at the earliest possible opportunity.

To avoid the issue of disclosure of answer-related information to candidates, all copyright acknowledgements are reproduced online in the Cambridge Assessment International Education Copyright Acknowledgements Booklet. This is produced for each series of examinations and is freely available to download at www.cambridgeinternational.org after the live examination series.

Cambridge Assessment International Education is part of Cambridge Assessment. Cambridge Assessment is the brand name of the University of Cambridge Local Examinations Syndicate (UCLES), which is a department of the University of Cambridge.

© UCLES 2023